# MODULAR type

## Shank and head can be combined freely to match the application.

▷ Various types of shanks and heads are freely combined to meet your machining needs.

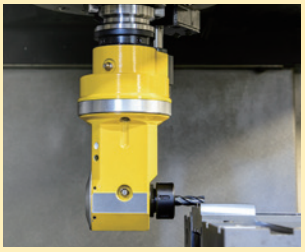

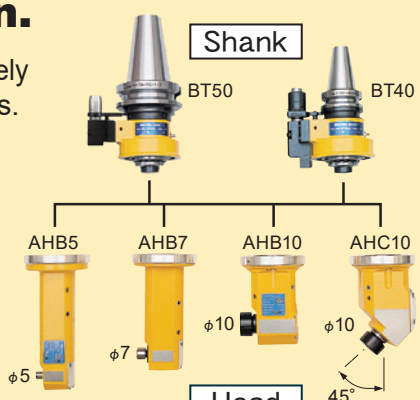


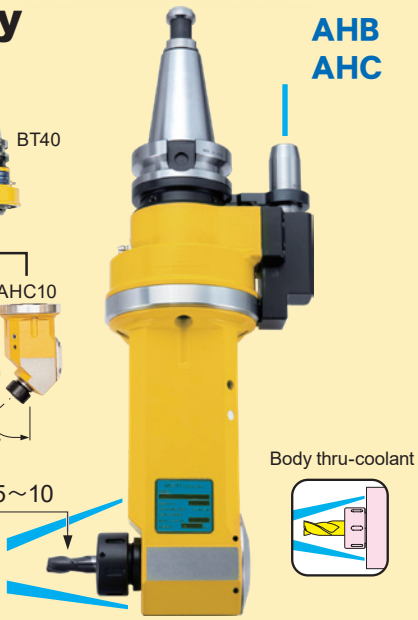


| Type | Chucking range | Gear ratio Main spindle:Angle shaft | MAX. (min⁻¹) Main spindle(CCW) : Angle shaft (CW) |
|---|---|---|---|
| AHB 5 | ϕ0.5~ 5 | 1:1 | 5,000:5,000 |
| AHB 7 | ϕ0.5~ 7 | | 6,000:6,000 (When using body thru-coolant) |
| AHB10 | ϕ2.4~10 | | |
| AHC10 | | | |

Fig. 1
**AHB**

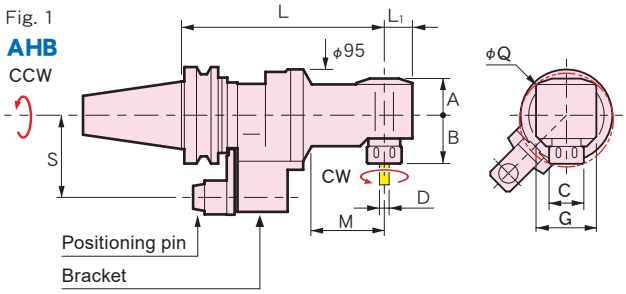


Fig. 2
**AHC**

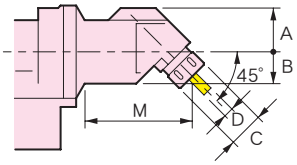


| CODE | Fig. | ϕD | L | ϕC | L1 | M | A | B | G | ϕQ | Kg | |
|---|---|---|---|---|---|---|---|---|---|---|---|---|
| BT40-AHB 5-210 | 1 | 0.5~ 5 | 210 | 12 | 20 | 85 | 25 | 32 | 47 | 62 | 5.5 | ER8 |
| -270 | | | 270 | | | 145 | | | | | 6.4 | |
| -AHB 7-180 | | 0.5~ 7 | 180 | 19 | 22 | 60 | 29 | 43 | 57 | 76 | 5.3 | ESX12 |
| -240 | | | 240 | | | 120 | | | | | 6.6 | |
| -AHB10-195 | | 2.4~10 | 195 | 36 | 29 | 80 | 38 | 50 | 63 | 96 | 6.2 | C10 |
| -255 | | | 255 | | | 140 | | | | | 7.9 | |
| -AHC10-230 | 2 | | 230 | | — | 110 | 45 | 32.5 | 66 | — | 6.2 | |
| BT50-AHB 5-225 | 1 | 0.5~ 5 | 225 | 12 | 20 | 85 | 25 | 32 | 47 | 62 | 8.8 | ER8 |
| -285 | | | 285 | | | 145 | | | | | 9.7 | |
| -AHB 7-195 | | 0.5~ 7 | 195 | 19 | 22 | 60 | 29 | 43 | 57 | 76 | 8.6 | ESX12 |
| -255 | | | 255 | | | 120 | | | | | 9.9 | |
| -AHB10-210 | | 2.4~10 | 210 | 36 | 29 | 80 | 38 | 50 | 63 | 96 | 9.5 | C10 |
| -270 | | | 270 | | | 140 | | | | | 11.2 | |
| -AHC10-245 | 2 | | 245 | | — | 110 | 45 | 32.5 | 66 | — | 9.5 | |

Cutting data P. 15

■**Option**
- Spring collet→P.14 ●Retention knob ●Semi-finished positioning block→P.14

■**Std. Access.**
- A complete set of spanners and wrenches.

■**Note**
- The phase of the drive key and the positioning pin may be set freely.
- Standard specifications: S = 60 mm, 65 mm (BT40), 80 mm, 85 mm, and 110 mm (BT50).
- Other shanks such as HSK, DIN and CAT. are also available upon request.

■**Caution**
- For the shape and mounting position of the positioning block, contact the machine manufacturer or MST.
- The height of the positioning pin depends on the shape of the positioning block.
- The machine spindle and angle shaft should rotate in reverse directions, so make sure the spindle rotates in the reverse direction.

## Shank / Head reference list

| CODE | Shank | Head |
|---|---|---|
| BT40-AHB 5-210 | BT40-MS-98 | MB 5-112 |
| -270 | | -172 |
| -AHB 7-180 | | MB 7- 82 |
| -240 | | -142 |
| -AHB10-195 | | MB10- 97 |
| -255 | | -157 |
| -AHC10-230 | | MC10-132 |
| BT50-AHB 5-225 | BT50-MS-113 | MB 5-112 |
| -285 | | -172 |
| -AHB 7-195 | | MB 7- 82 |
| -255 | | -142 |
| -AHB10-210 | | MB10- 97 |
| -270 | | -157 |
| -AHC10-245 | | MC10-132 |

# SOLID type

## The popular type that can chuck small- to large-diameter cutters.



**AHD**



BT30 Quick-change type

**AHA**




BT50-AHA25-195

| Type | Chucking range | Gear ratio<br>Main spindle : Angle shaft | MAX. (min⁻¹)<br>Main spindle(CCW) : Angle shaft (CW) |
|---|---|---|---|
| AHA 20 | ϕ5.8~20 | 1:0.81 | 3,000:2,430 |
| AHA 25 | ϕ5.8~25 | 1:0.96 | 2,500:2,400 |
| AHD 30 | BT30 tools | | |

Fig. 1

**AHA**

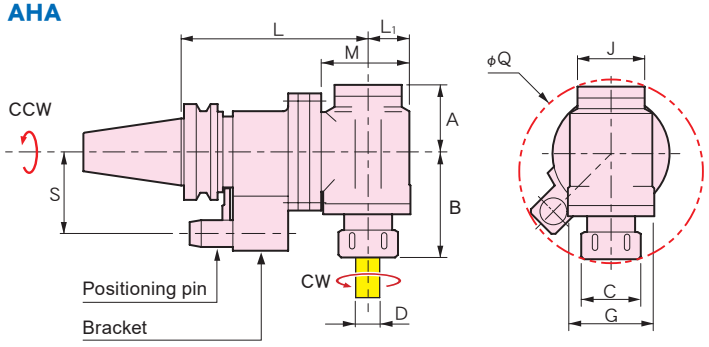


Fig. 2

**AHD**

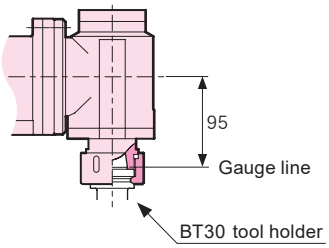


| CODE | Fig. | ϕD | L | L1 | M | A | B | G | ϕC | J | ϕQ | Kg | |
|---|---|---|---|---|---|---|---|---|---|---|---|---|---|
| BT40-AHA20-160 | 1 | 5.8~20 | 160 | 40 | 85 | 65 | 95 | 88 | 50 | 65 | 171 | 7.3 | C20 |
| BT50-AHA20-195 | 1 | 5.8~20 | 195 | 40 | 89 | 65 | 95 | 88 | 50 | 65 | 171 | 13.1 | C20 |
| -250 | | | 249 | | | | | | | | | 14.8 | |
| -AHA25-195 | | 5.8~25 | 195 | 44 | 93 | 70 | 110 | 90 | 62 | 70 | 193 | 13.6 | C25 |
| -250 | | | 249 | | | | | | | | | 15.3 | |
| -AHD30-195 | 2 | — | 195 | | | | 112.6 | | 66 | | | 14.7 | — |

Cutting data P. 15

**■Option**
- Spring collet→P.14 ●Retention knob
- Semi-finished positioning block→P.14

**■Std. Access.**
- A complete set of spanners and wrenches

**■Note**
- The phase of the drive key and the positioning pin may be set freely.
- Standard specifications: S = 60 mm, 65 mm (BT40), 80 mm, 85 mm, and 110 mm (BT50).
- Other shanks such as HSK, DIN and CAT. are also available upon request.

**■Caution**
- For the shape and mounting position of the positioning block, contact the machine manufacturer or MST.
- The height of the positioning pin depends on the shape of the positioning block.
- The machine spindle and angle shaft should rotate in reverse directions, so make sure the spindle rotates in the reverse direction.

# FLANGE type

## Heavy cutting is possible by mounting the angle head flange type directly on the machine spindle surface.

▷ This angle head is applicable to heavy cutting by mounting to the machine spindle.








F190-AHA25-350

| Type | Chucking range | Gear ratio<br>Main spindle : Angle shaft | MAX. min⁻¹<br>Main spindle(CCW):Angle shaft(CW) |
|---|---|---|---|
| AHA20 | ϕ5.8～20 | 1 : 0.81 | 3,000 : 2,430 |
| AHA25 | ϕ5.8～25 | 1 : 0.96 | 2,500 : 2,400 |
| AHD30 | BT30 tools | | |

Fig. 1

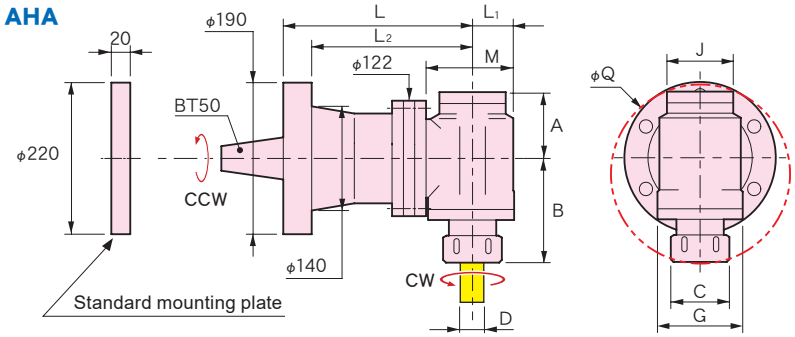


Fig. 2

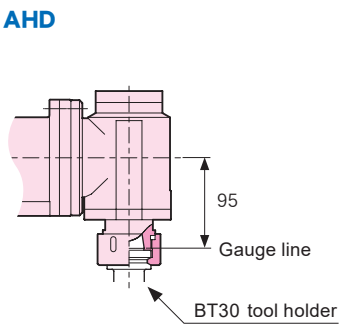


| CODE | Fig. | ϕD | L | L1 | L2 | M | A | B | G | ϕC | J | ϕQ | Kg | |
|---|---|---|---|---|---|---|---|---|---|---|---|---|---|---|
| F190-AHA20-200 | 1 | 5.8～20 | 200 | 40 | 160 | 89 | 65 | 95 | 88 | 50 | 65 | 171 | 18 | C20 |
| -350 | | | 350 | | 310 | | | | | | | | 28 | |
| -AHA25-200 | | 5.8～25 | 200 | 44 | 160 | 93 | 70 | 110 | 90 | 62 | 70 | 193 | 18.5 | C25 |
| -350 | | | 350 | | 310 | | | | | | | | 28.5 | |
| -AHD30-200 | 2 | — | 200 | | 160 | | | | | 66 | | | 19.6 | — |
| -350 | | | 350 | | 310 | | | 112.6 | | | | | 29.8 | |

■**Option**
- Spring collet→P.14 ● Retention knob

■**Std. Access.**
- A complete set of spanners and wrenches
- Standard mounting plate(No mounting holes are provided.)
- Mounting bolts for ANGLE HEAD

■**Note**
- NT50U shank is also available.

■**Caution**
- For mounting plate shapes and mounting bolt location, contact the machine manufacturer or MST.
- The machine spindle and angle shaft should rotate in reverse directions, so make sure the spindle rotates in the reverse direction.

# UNIVERSAL type

## Machining at every angle is possible with just this one unit.

### Splash coolant-through body

Whatever machining angle is set, coolant is properly supplied to the cutting edge.



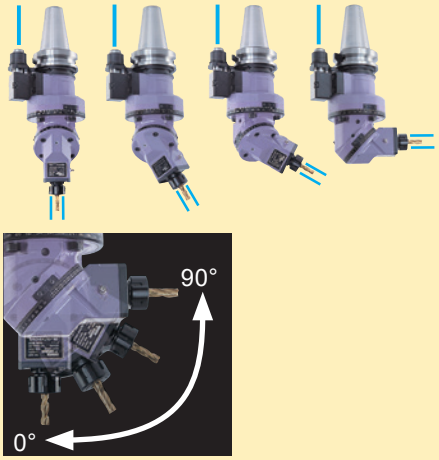


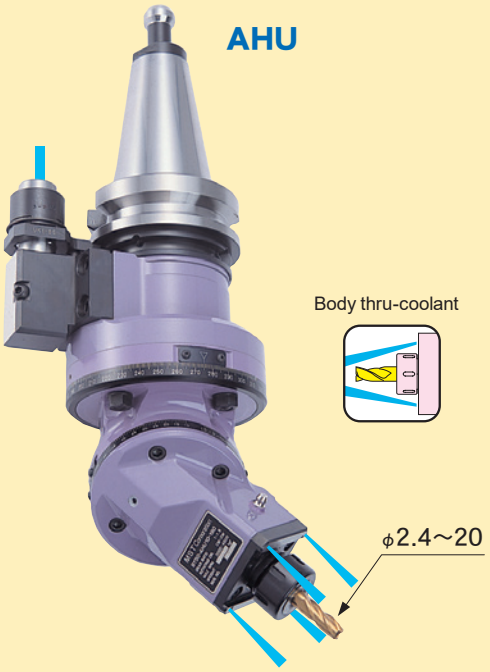


BT50-AHU10-190

| Type | Chucking range | Gear ratio<br>Main spindle : Angle shaft | MAX. (min⁻¹)<br>Main spindle(CW) : Angle shaft(CW) |
|---|---|---|---|
| AHU10 | ϕ2.4~10 | 1 : 1.5 | 3,000 : 4,500 |
| AHU20 | ϕ5.8~20 | 1 : 1 | 3,000 : 3,000 |

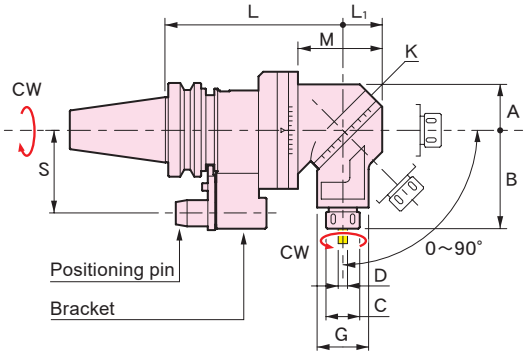


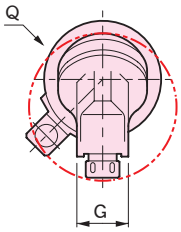


| CODE | ϕD | L | L1 | M | A | B | K | G | ϕC | ϕQ | Kg | |
|---|---|---|---|---|---|---|---|---|---|---|---|---|
| **BT40**-AHU10-175 | 2.4~10 | 175 | 42 | 96 | 49 | 105 | 95 | 55 | 32 | 156 | 9.6 | C10 |
| **BT50**-AHU10-190 | 2.4~10 | 190 | 42 | 90 | 49 | 105 | 95 | 55 | 32 | 156 | 13.9 | C10 |
| -AHU20-200 | 5.8~20 | 200 | 54 | 112 | 58.5 | 130 | 120 | 70 | 50 | 192 | 15.8 | C20 |

Cutting data P.15

■**Option**
- Spring collet →P.14 ●Retention knob ●Semi-finished positioning block →P.14
- Test bar

■**Std. Access.**
- A complete set of spanners and wrenches

■**Note**
- The phase of the drive key and the positioning pin may be set freely.
- Standard specifications: S = 60 mm, 65 mm (BT40), 80 mm, 85 mm, and 110 mm (BT50).
- Other shanks such as HSK, DIN and CAT. are also available upon request.

■**Caution**
- For the shape and mounting position of the positioning block, contact the machine manufacturer or MST.
- The height of the positioning pin depends on the shape of the positioning block.
- The machine spindle and angle shaft should rotate in forward directions, so make sure the spindle rotates in the forward direction.

### Test bar

Use for super accurate angle adjustment.

| CODE | Holder type |
|---|---|
| TBU10 | AHU10 |
| TBU20 | AHU20 |

